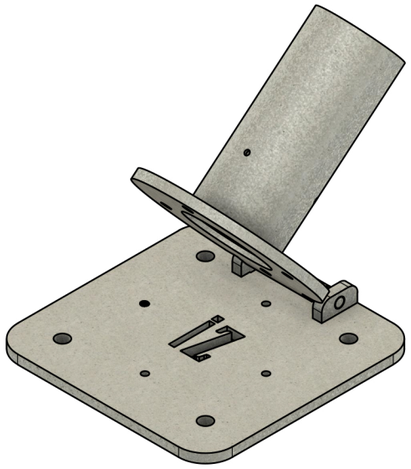

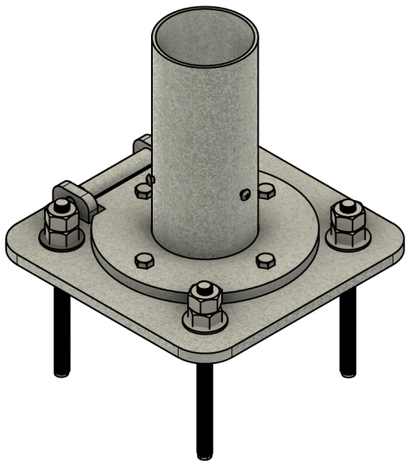

Hinged Base Detail

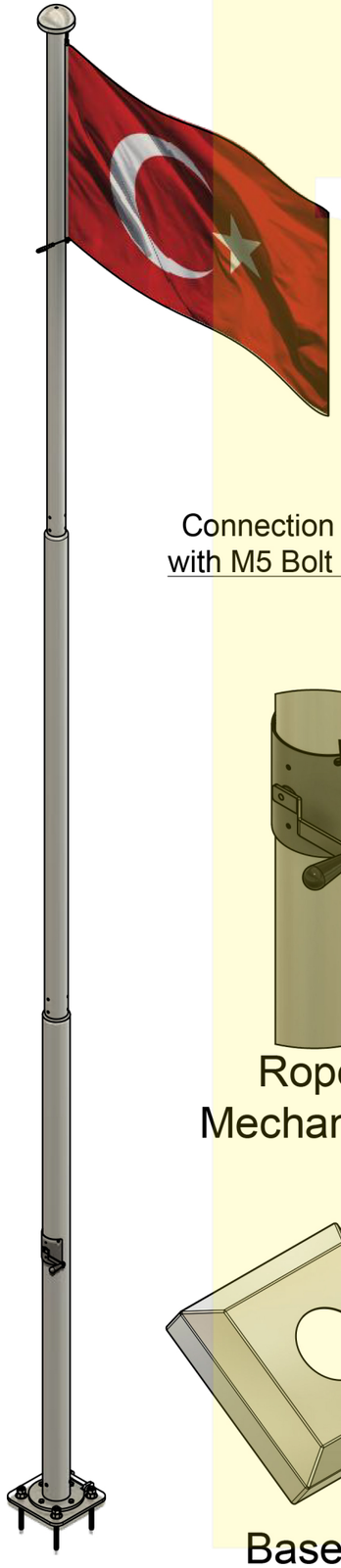

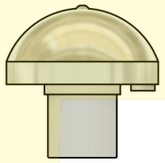

Revolving Truck

Flag Beads

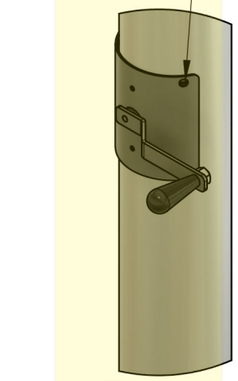

Connection with M5 Bolt

Rope Mechanism

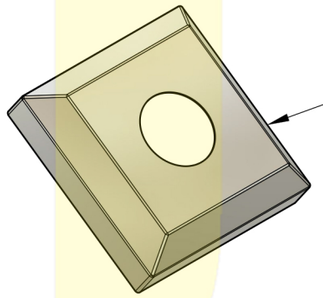

Stainless Steel

Base Accessory

Connection with 6*M5 Bolt

Module Connection Detail

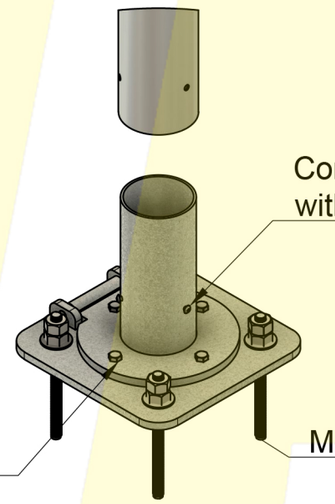

Connection with 3*M5 Bolt

Connection with M8 Bolt

M12x200 TIJ

Base Connection Detail

TIJ (ROT) 4*M12*200

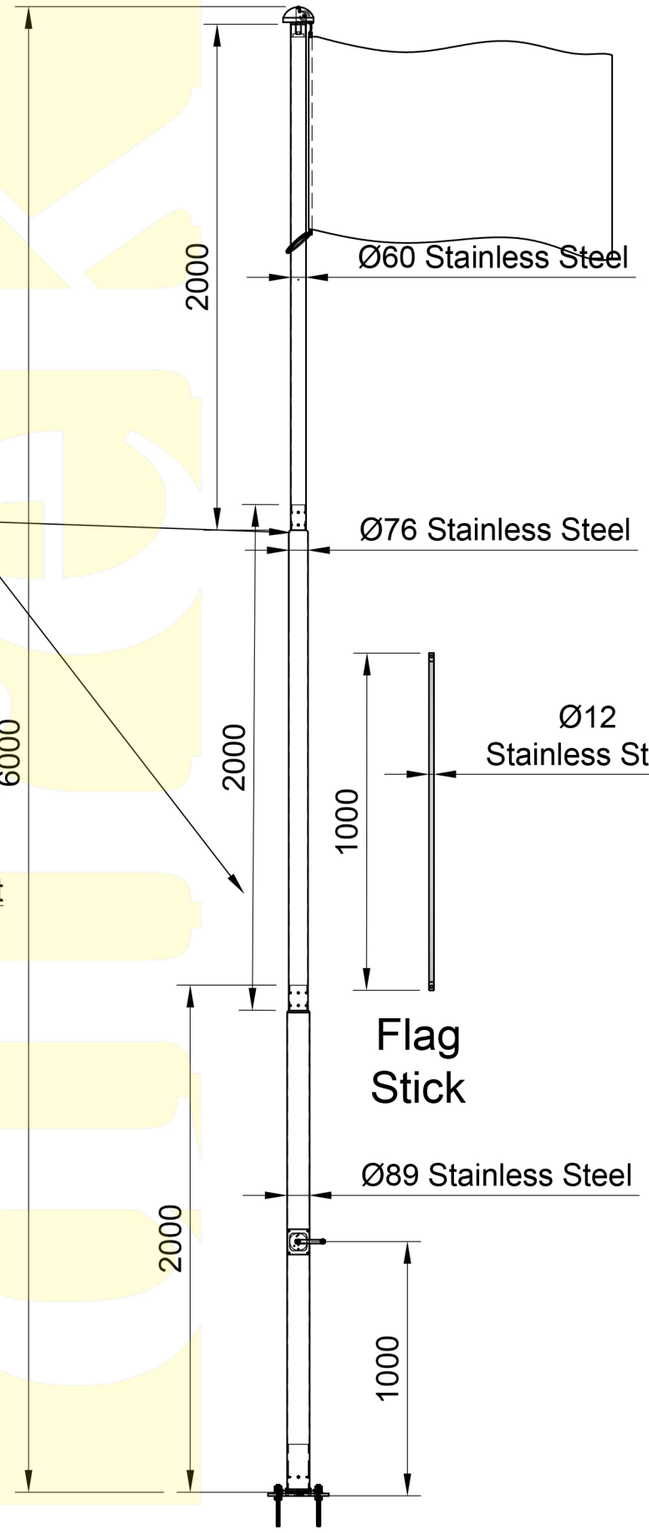

Flag Stick