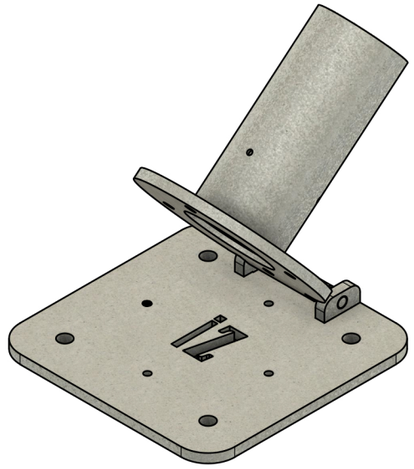

Hinged Base Detail

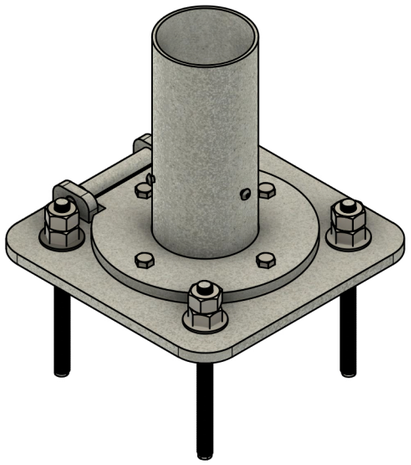

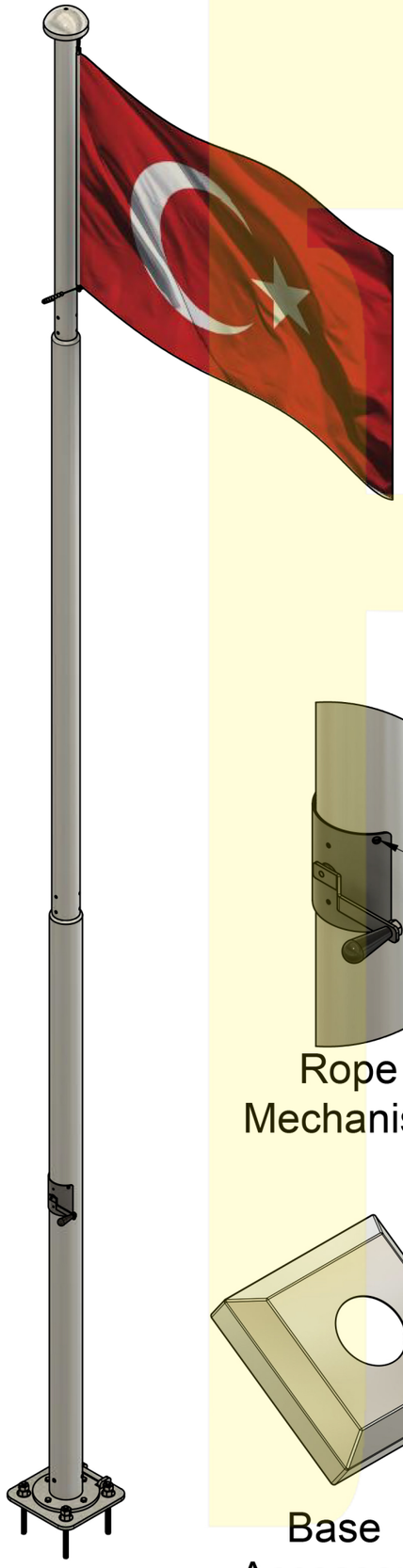

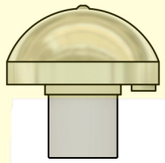

Revolving Truck

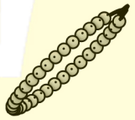

Flag Beads

Connection with 6*M5 Bolt

Module Connection Detail

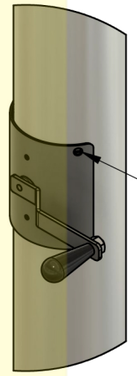

Connection with M5 Bolt

Rope Mechanism

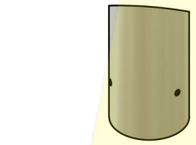

Connection with 3*M5 Bolt

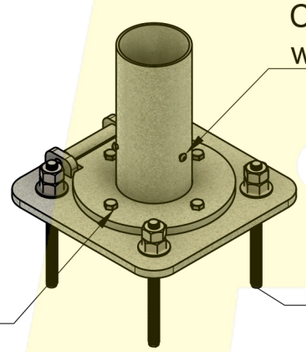

Connection with M8 Bolt

M12x200 TIJ

Base Connection Detail

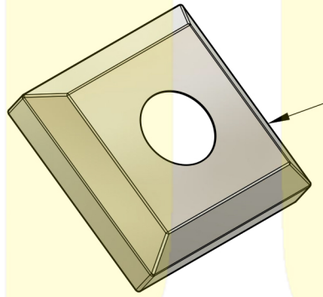

Stainless Steel

Base Accessory
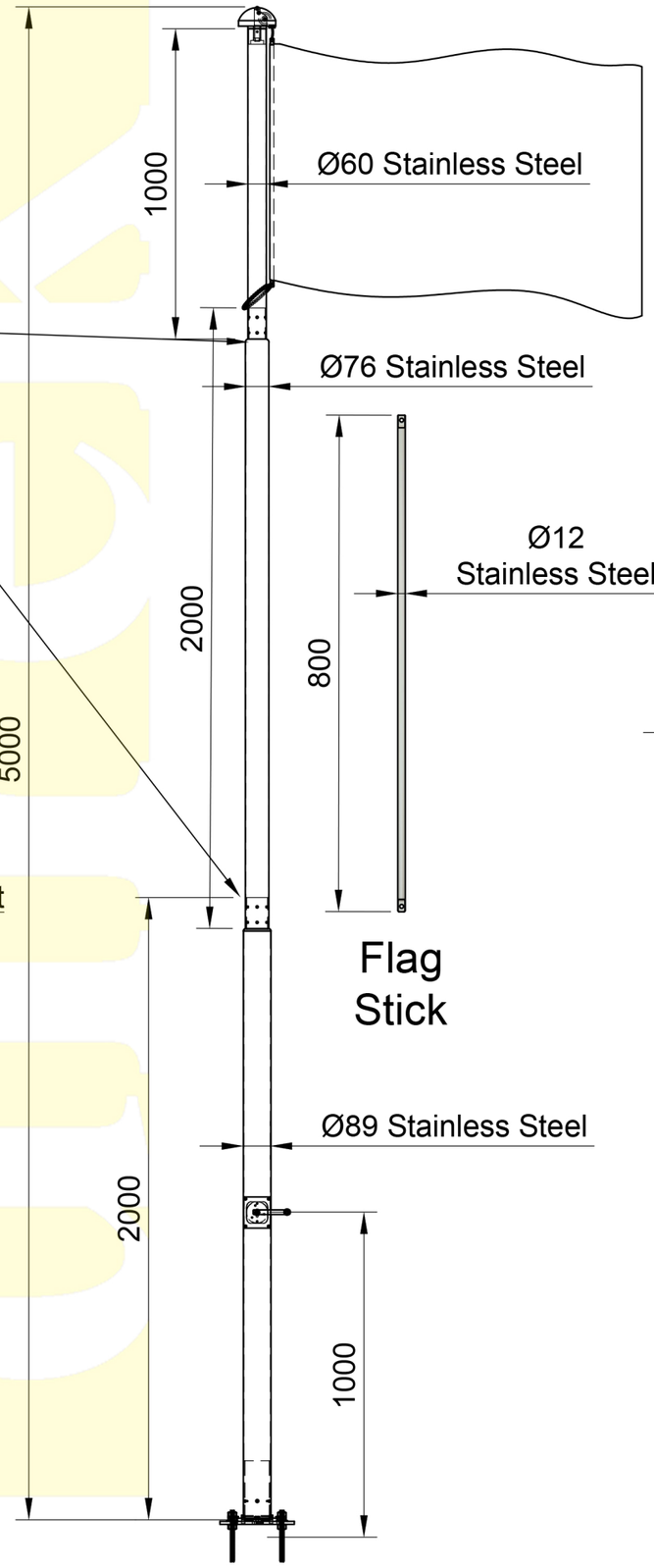
TIJ (ROT) 4*M12*200